Description

- 115 V ac or 230 V ac supply voltage
- Relay output
- Nudging time-out relay output
- Switch selectable light or dark function
- Switch selectable receiver control function
- Switch selectable output reset function
- Switch selectable buzzer
- Adjustable nudging time-out delay
- Test push button
- Power, output and nudging output indicators
- Spring-clamp terminal connection

The SGC 1 is intended to be used in conjunction with the SG 1, SG 2, SG 10 or SG 14 self-contained light curtain series, where a DC supply voltage is not available and where a relay output is required. The controller series is supplied with a fixed 24 V dc output voltage. Light or dark function and receiver control function is switch selectable.

The series is available with a nudging time-out feature which allows a separate relay output to activate after a pre-set delay time after the signal output has been permanently activated. Nudging time-out delay is potentiometer adjustable from 3 to 60 seconds. The controller is available with a buzzer which may be activated to indicate a nudging time-out output.

The SGC 1 offers a test button, which may be used for disabling the transmitting power temporarily for test purposes.

Technical Data	
Supply voltage	115 V ac or 230 V ac
Voltage tolerance	+/– 10%
Current consumption	Max. 250 mA
Relay output	1 open / 1 close, 250 V ac / 3A, 120 V ac / 5A
Nudging relay output	1 open / 1 close, 250 V ac / 3A, 120 V ac / 5A
Supply output voltage	24 V dc
Supply output current	150 mA
Power on indicator	Green LED
Output indicator	Yellow LED
Nudging time-out indicator	Yellow LED
Housing material	ABS

Environmental Data	
Vibration	10 – 55 Hz, 1,5 mm
Shock	30 g
Temperature, operation	–20 to +65 °C
Temperature, storage	–40 to +80 °C
Sealing class	IP 41
Approvals	CE

Available Types

Model	Connection	Output	Supply Voltage	115 V ac	230 V ac
			Feature	Order Reference	
SGC 1 A	Spring-clamp terminal	Relay	Nudging time-out function	**SGC 1 A 501**	**SGC 1 A 500**
SGC 1 B			–	**SGC 1 B 501**	**SGC 1 B 500**

Wiring Diagrams

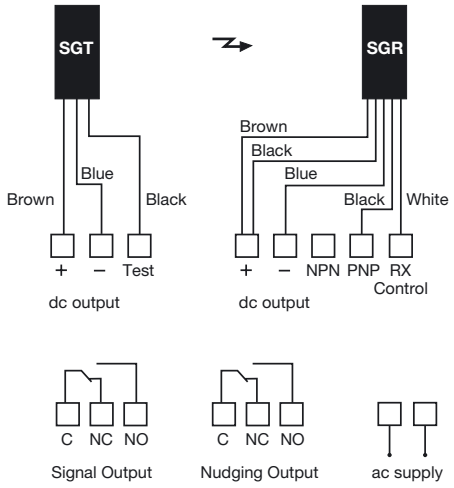

SGC 1 A
(Shown connected as PNP)

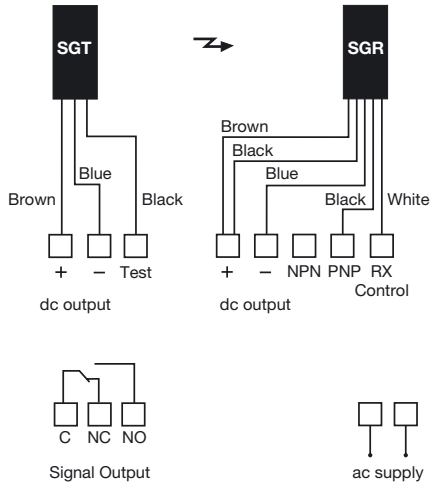

SGC 1 B
(Shown connected as PNP)

Dimensions and Descriptions

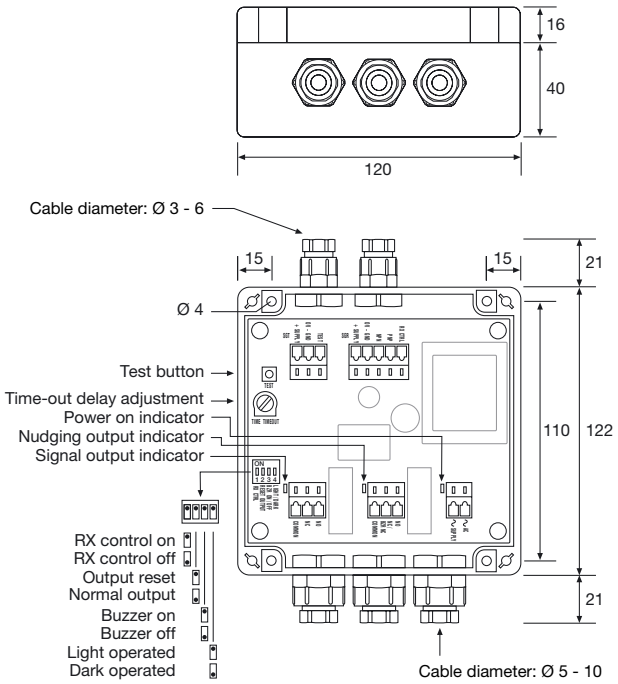

SGC 1 A

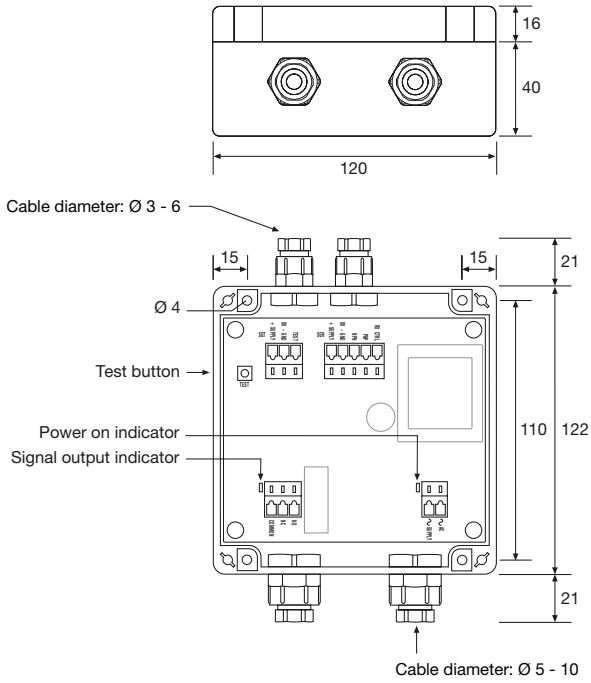

SGC 1 B

(Units in mm)

Telco reserves the right to change specifications without notice.